PT9DN

Heavy Industrial • DeviceNET®

Linear Position/Velocity to 550 inches (1400 cm)
Aluminum or Stainless Steel Enclosure Options
VLS Option To Prevent Free-Release Damage
IP67 • NEMA 6 Protection

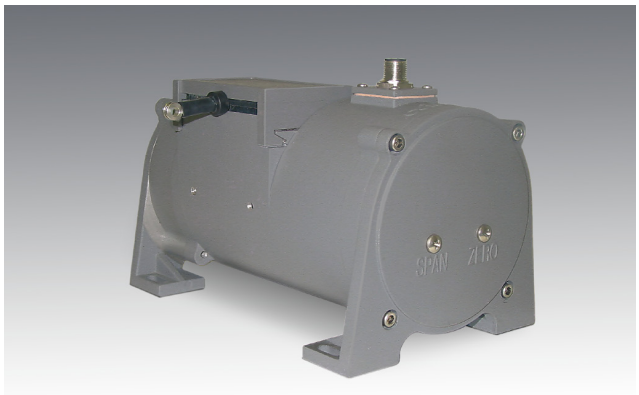

GENERAL

Full Stroke Range Options (on this datasheet)	0-75 to 0-550 inches
Electrical Signal Interface	CANbus ISO 11898
Protocol	DeviceNET Version 2.0
Accuracy	± 0.10% full stroke
Repeatability	± 0.02% full stroke
Resolution	± 0.003% full stroke
Measuring Cable Options	nylon-coated stainless steel or thermoplastic
Enclosure Material	powder-painted aluminum or stainless steel
Sensor	plastic-hybrid precision potentiometer
Potentiometer Cycle Life	≥ 250,000 cycles
Maximum Retraction Acceleration	see ordering information
Maximum Velocity	see ordering information
Weight, Aluminum (Stainless Steel) Enclosure	8 lbs. (16 lbs.), max.

ELECTRICAL

Input Voltage	bus powered
Input Current	40 mA max.
Address Setting/Node ID	0...63 set via DIP switches (default: 63)
Baud Rate	125K, 250K or 500K set via DIP switches
EDS File	available @ http://celesco.com/downloads

ENVIRONMENTAL

Enclosure	NEMA 4/4X/6, IP 67
Operating Temperature	-40° to 200°F (-40° to 90°C)
Vibration	up to 10 g to 2000 Hz maximum

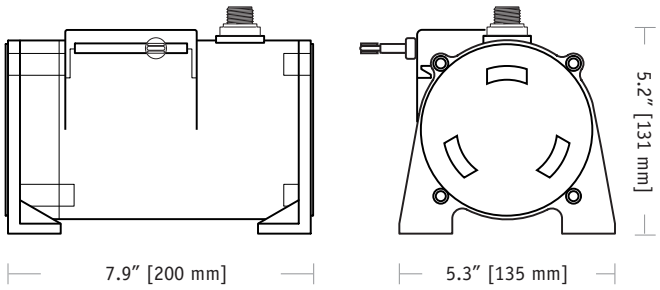

The PT9DN communicates via DeviceNET protocol with programmable controllers in factories and harsh environments requiring linear position measurements in ranges up to 550".

As a member of Celesco's innovative family of NEMA 4 rated cable-extension transducers, the PT9DN installs in minutes by simply mounting it's body to a fixed surface and attaching it's cable to the movable object. Perfect parallel alignment not required.

Output Signal:

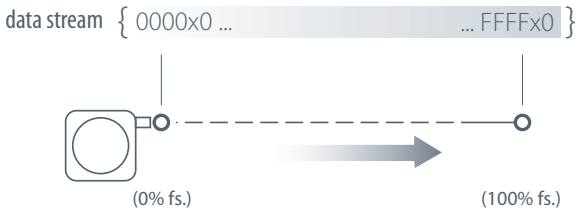

I/O Format:

Data Frame

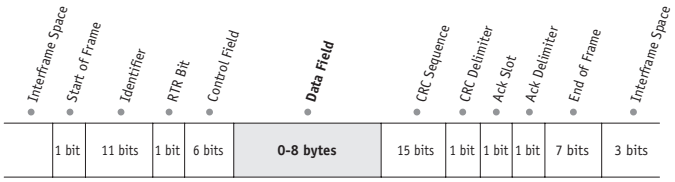

Data Field

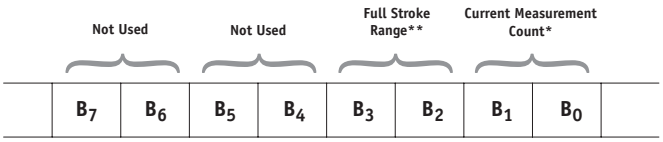

B_0 = LSB current measurement byte
B_1 = MSB current measurement byte
B_2 = LSB full stroke range byte
B_3 = MSB full stroke range byte
B_4 - B_7 = not used

*Current Measurement Count

The **C**urrent **M**easurement **C**ount (**CMC**) is the output data that indicates the present position of the measuring cable.

The CMC is a 16-bit value that occupies the first two bytes (B_0 and B_1) of the data field. B_0 is the LSB (least significant byte) and B_1 is the MSB (most significant byte).

The CMC starts at 0000H with the measuring cable fully retracted and continues upward to the end of the stroke range stopping at FFFFH. This holds true for all ranges.

**Full Stroke Range

The **F**ull **S**troke **R**ange **(FSR)** is a 16-bit value in the data field that expresses the full range of the sensor in inches. This value can be used to convert the actual count to units of measurement should the application require it.

The full stroke measurement range occupies the second two bytes (B_2 and B_3) of the data field.

B_2 is the LSB (least significant byte) and B_3 is the MSB (most significant byte).

This value is expressed in inches.

Example:

Hex Value	*Decimal Equivalent*	*Full Stroke Range*
001E	30	30 inches

Converting CMC to Inches

If required, the CMC can easily be converted to a linear measurement expressed in inches instead of just counts.

This is accomplished by first dividing the CMC by 65,535 (total counts over the range) and then multiplying that value by the FSR:

$$\left(\frac{\text{CMC}}{65{,}535}\right) \text{X FSR}$$

Example:

If the full stroke range is **30 inches** and the current position is **0FF2 Hex** (4082 Decimal) then,

$$\left(\frac{4082}{65{,}535}\right) \text{X } 30.00 \text{ inches} = 1.87 \text{ inches}$$

Address Setting (Node ID), Baud Rate and Bus Termination Settings

Address Setting (Node ID)

The Address Setting (Node ID) is set via 6 switches located on the 8-pole DIP switch found on the DeviceNET controller board located inside the transducer.

The DIP switch settings are binary starting with switch number **1** (= 2^0) and ending with switch number **6** (= 2^5).

DIP-1 (2^0)	DIP-2 (2^1)	DIP-3 (2^2)	DIP-4 (2^3)	DIP-5 (2^4)	DIP-6 (2^5)	*address* (decimal)
0	0	0	0	0	0	0
1	0	0	0	0	0	1
0	1	0	0	0	0	2
...	...	...	...	...	...	...
1	1	1	1	1	1	63

Baud Rate

The transmission baud rate may be either factory preset at the time of order or set manually at the time of installation.

The baud rate can be set using switches **7** & **8** on the 8-pole DIP switch found on the DeviceNET controller board located inside the transducer.

DIP-7	DIP-8	baud rate
0	0	125k
1	0	250k
0	1	500k
1	1	125k

Bus Termination

The setting of the internal bus termination resistor may be specified upon order or manually changed by the end user at the time of installation.

The bus termination resistor is activated setting switches **1** & **2** on the 2-pole DIP switch (located on the internal DeviceNET controller board) to the "ON" position.

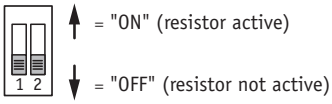

DeviceNET Controller Board and DIP Switch Location

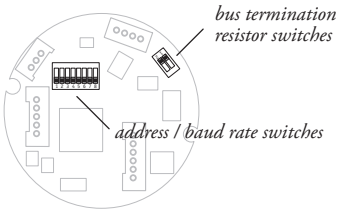

Caution! Do Not Remove Spring-Side End Cover

removing spring-side end cover could cause spring to become unseated and permanently damaged.

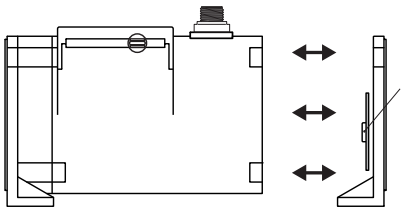

internal dip switches & controller board

to gain access to the controller board, remove four Allen-Head Screws and remove end cover bracket.

Fig. 1 – Outline Drawing (18 oz. cable tension only)

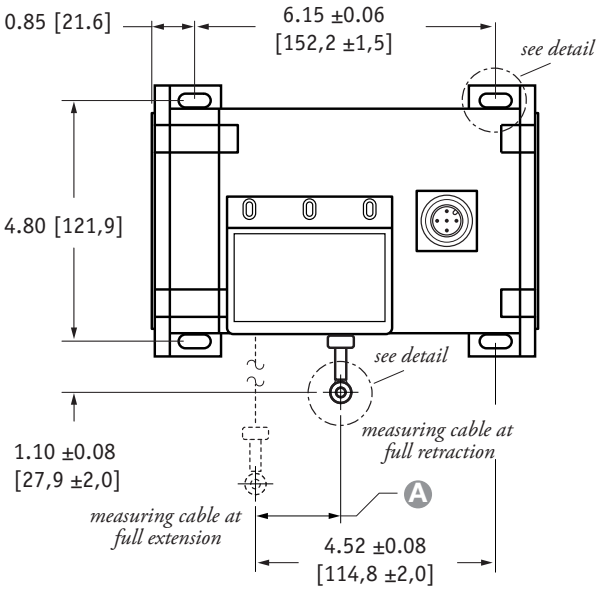

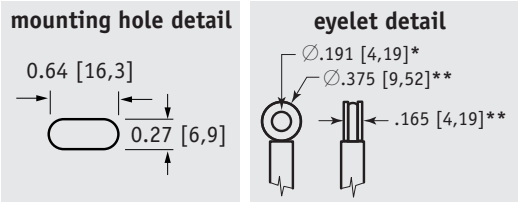

A DIMENSION (INCHES)

RANGE	MEASURING CABLE ∅.031 in.	∅.034 in.	∅.047 in.	∅.062 in.
75	n/a	0.22	0.29	0.37
100	n/a	0.29	0.39	0.49
150	n/a	0.44	0.59	0.73
200	n/a	0.58	0.79	0.98
250	n/a	0.73	0.98	1.22
300	n/a	0.88	1.18	1.47
350	n/a	1.02	1.38	1.71
400	n/a	1.17	1.57	1.96
450	n/a	1.31	1.77	n/a
500	n/a	1.46	1.97	n/a
550	1.61	1.61	n/a	n/a

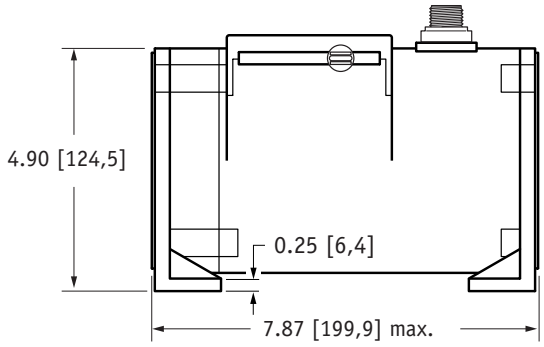

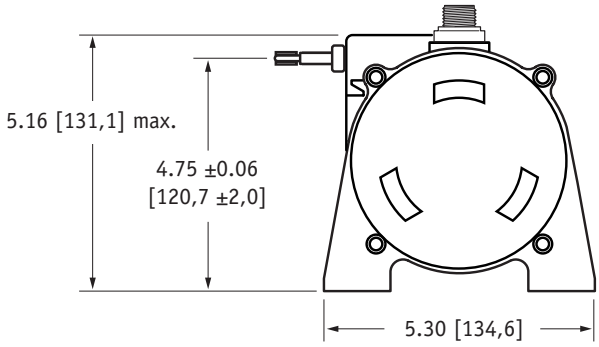

DIMENSIONS ARE IN INCHES [MM]
tolerances are 0.03 IN. [0.5 MM] unless otherwise noted.

* tolerance = +.005 –.001 [+.13 –.03]
** tolerance = +.005 –.005 [+.13 –.13]

Ordering Information:

Model Number:

PT9DN - ____ - ___ - ___ - ___ - ___ - ___ - ___ - ___
order code: R A B C D E F G

Sample Model Number:

PT9DN - 200 - AL - N34 - 26 - FR - 500 - TR - SC5

R	range:	200 inches
A	enclosure	aluminum
B	measuring cable:	.034 nylon-coated stainless
C	measuring cable tension:	18 oz.
D	cable exit:	front (horizontal)
E	baud rate:	500 k bits/sec.
F	terminating resistor:	yes
G	electrical connection:	5-meter cordset with straight plug

Full Stroke Range:

R order code:	75	100	150	200	250	300	350	400	450*	500*	550*
full stroke range, min:	75 in.	100 in.	150 in.	200 in.	250 in.	300 in.	350 in.	400 in.	450 in.	500 in.	550 in.

** – 36 oz. cable tension strongly recommended*

Enclosure Material:

A order code:	AL	SS
	powder-painted aluminum	303 stainless

Ordering Information (cont.):

Measuring Cable:

Ⓑ order code:	N34	S47	S31	V62
cable construction:	Ø.034-inch nylon-coated stainless steel rope	Ø.047-inch bare stainless steel rope	Ø.031-inch bare stainless steel rope	Ø.058-inch PVC jacketed vectra fiber rope
available ranges:	*all ranges*	*all ranges up to 500 inches*	*550 inch range only*	*all ranges up to 400 inches*
general use:	indoor	outdoor, debris, high temperature	outdoor, debris, high temperature	high voltage or magnetic field

Measuring Cable Tension:

Ⓒ order code:	26		52	
tension (30%):	18 oz.		36 oz.	
enclosure material:	*aluminum*	*stainless steel*	*aluminum*	*stainless steel*
max. acceleration:	1 g	.33 g	5 g	2 g
max. velocity:	60 inches/sec	20 inches/sec	200 inches/sec	80 inches/sec
	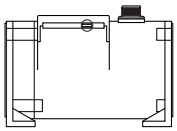 standard housing *see fig 1.*		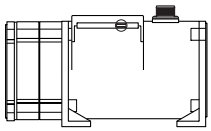 dual-spring housing *see fig 2.*	

Cable Exit:

Ⓓ order code:	FR	UP	BK	DN
	front	top	back	down
	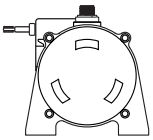	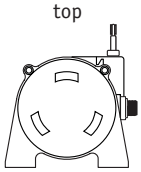	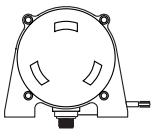	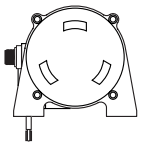

Baud Rate:

Ⓕ order code:	125	250	500
	125 kbaud	250 kbaud	500 kbaud

Terminating Resistor:

Ⓕ order code:	TR	NR
	terminating resistor	no terminating resistor

Electrical Connection:

Ⓖ order code:	blank	MC5	SC5	NC5
	5-pin micro-connector *(no mating plug supplied)*	5-pin micro-connector w/ mating plug	5-pin micro-connector and 5 meter length cordset w/straight mating plug	5-pin micro-connector and 5 meter length cordset w/90° mating plug

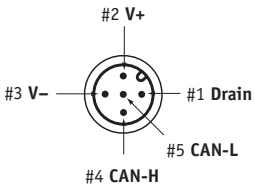

connector (contact view)

0.16" - 0.32" OD Cable (THIN)

length: 16ft [5M]
cable: Thin

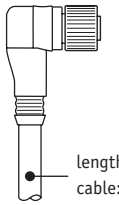

length: 16ft [5M]
cable: Thin

mating plug (contact view)

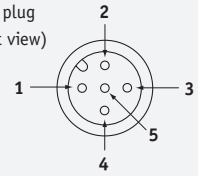

pin	signal	wire color
1	drain	brown
2	V+	white
3	V-	blue
4	Can-H	black
5	Can-L	grey

Fig. 2 – Outline Drawing (36 oz. cable tension only)

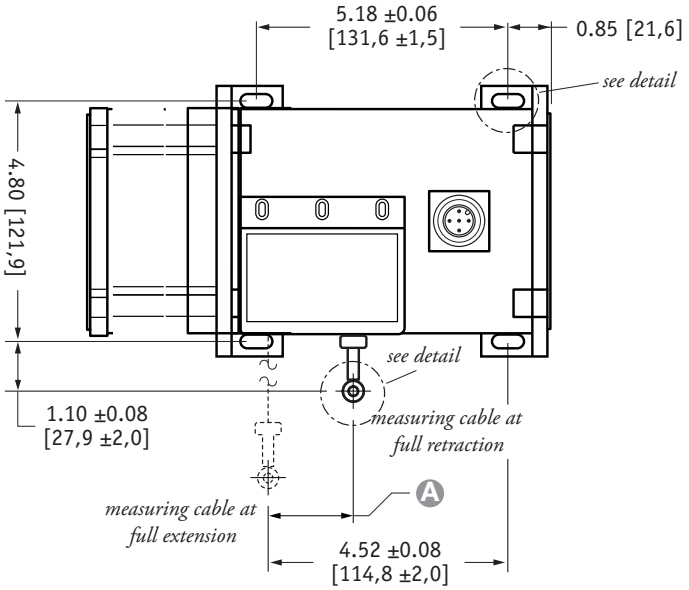

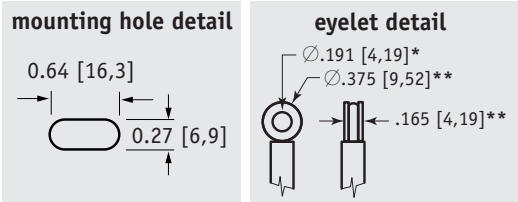

A DIMENSION (INCHES)

RANGE	MEASURING CABLE ∅.031 in.	∅.034 in.	∅.047 in.	∅.062 in.
75	n/a	0.22	0.29	0.37
100	n/a	0.29	0.39	0.49
150	n/a	0.44	0.59	0.73
200	n/a	0.58	0.79	0.98
250	n/a	0.73	0.98	1.22
300	n/a	0.88	1.18	1.47
350	n/a	1.02	1.38	1.71
400	n/a	1.17	1.57	1.96
450	n/a	1.31	1.77	n/a
500	n/a	1.46	1.97	n/a
550	1.61	1.61	n/a	n/a

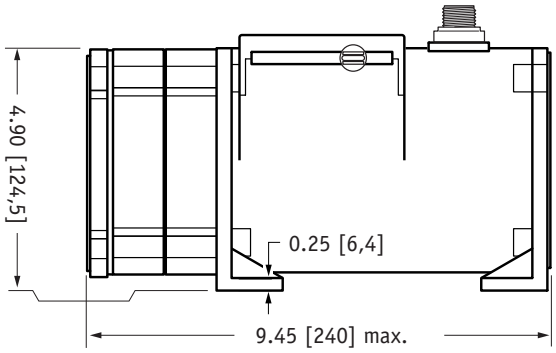

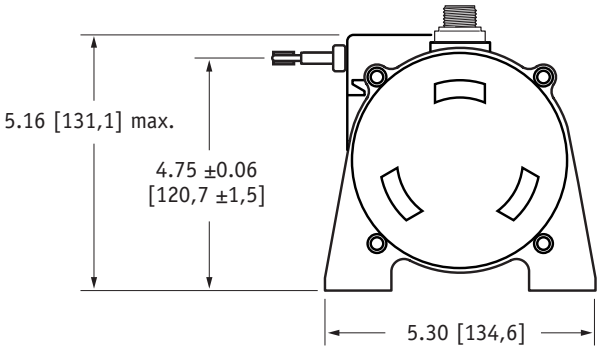

DIMENSIONS ARE IN INCHES [MM]
tolerances are 0.03 IN. [0.5 MM] unless otherwise noted.

* tolerance = +.005 –.001 [+.13 –.03]
** tolerance = +.005 –.005 [+.13 –.13]

VLS Option - Free Release Protection

The patented Celesco Velocity Limiting System (VLS) is an option for PT9000 Series cable extension transducers that limits cable retraction to a safe 40 to 55 inches per second for the single spring option and 40 to 80 inches per second for the higher tension dual spring option.

The VLS option prevents the measuring cable from ever reaching a damaging velocity during an accidental free release. This option is ideal for mobile applications that require frequent cable disconnection and reconnection. It prevents expensive unscheduled downtime due to accidental cable mishandling or attachment failure.

How To Configure Model Number for VLS Option:

VLS9DN - ____ - __ - __ - __ - __ - __ - __ - __
(R) (A) (B) (C) (D) (E) (F) (G)

creating VLS model number (example)...

1. select PT9DN model — **PT9DN-200-N34-26...**
2. remove "PT" from the model number — **~~PT~~9DN-200-N34-26...**
3. add "VLS" — **VLS + DN-200-N34-26...**
4. completed model number ! — **VLSDN-200-N34-26...**

联系方式

深圳市亿为测控电子有限公司
Shenzhen Bill-Well Measurement & Control Electronics Co., Ltd.
广东省深圳市南山区创业路怡海广场东座2407 邮编：518000
电话：+86 755 2641 9890　　传真：+86 755 2641 9680
电子邮箱：sales@bill-well.com